Open Platform for NFV

ONOS Framework (ONOSFW) Project Proposal

Please direct any questions or comments to forum@onosfw.com or to http://forum.onosfw.com

LINUX FOUNDATION
COLLABORATIVE PROJECTS

Contents

- Overview
- Value to OPNFV
- Scope
- Relationship to Existing Projects
- Timeline
- Resources

ONOS Framework for OPNFV Overview

- Based on, and extends, open source ONOS SDN Controller
  - To give users greater flexibility of choosing network controller technologies
  - To provide service and application developers simpler environment
  - To leverage broader open source efforts and results
  - To better support carrier use cases
- Creates framework for ONOS, and other SDN controllers, to better fulfill the functions of an NFV VIM
- Provide tight integration with BGS, Octopus, Copper, and other OPNFV projects
- Build and drive app community to leverage intent-based NBI

Values to OPNFV Customers - Major highlights

- Brings **Diversity & Competitive** landscape to OPNFV ecosystem to grow
- ONOS is a Core SDN Controller with **Intent based API**, and with **excellent flow rate** (> 2m flow rules/cluster)
- Has ability to support **pluggable SDN Controllers** with common NB APIs for easy application adaption
- **Topology** (Physical/logical discovery and Data Models)
- **Intent** (NB Policy tied to API REST calls) – ONF SDN/ETSI EVE compatible
- **Path** (Mapping vLink/Link for Data Plane)
- Support modular **PIMs** through Octopus project playbooks
  - Ironic, Foreman, MaaS, Fuel, Compass
  - Ability to support both agent based / agent less orchestrations
- **Support CG Integration for OPNFV projects :IPv6, Multi-Site, Congress, Promise, VNFFG, Doctor, Elevator, DP acceleration**

ONOS as leading edge SDN Stack in OPNFV

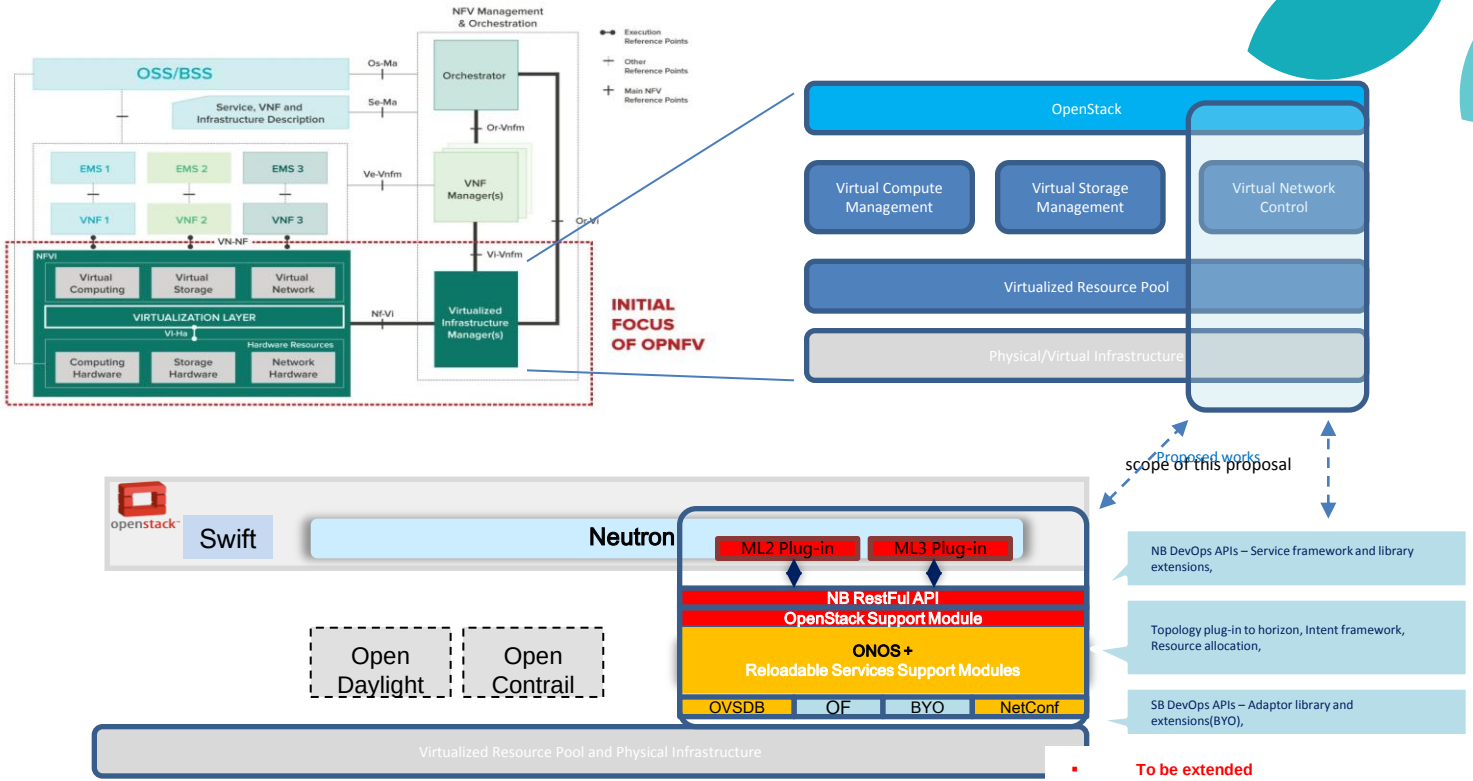

Value to OPNFV– **carrier-grade attributes**

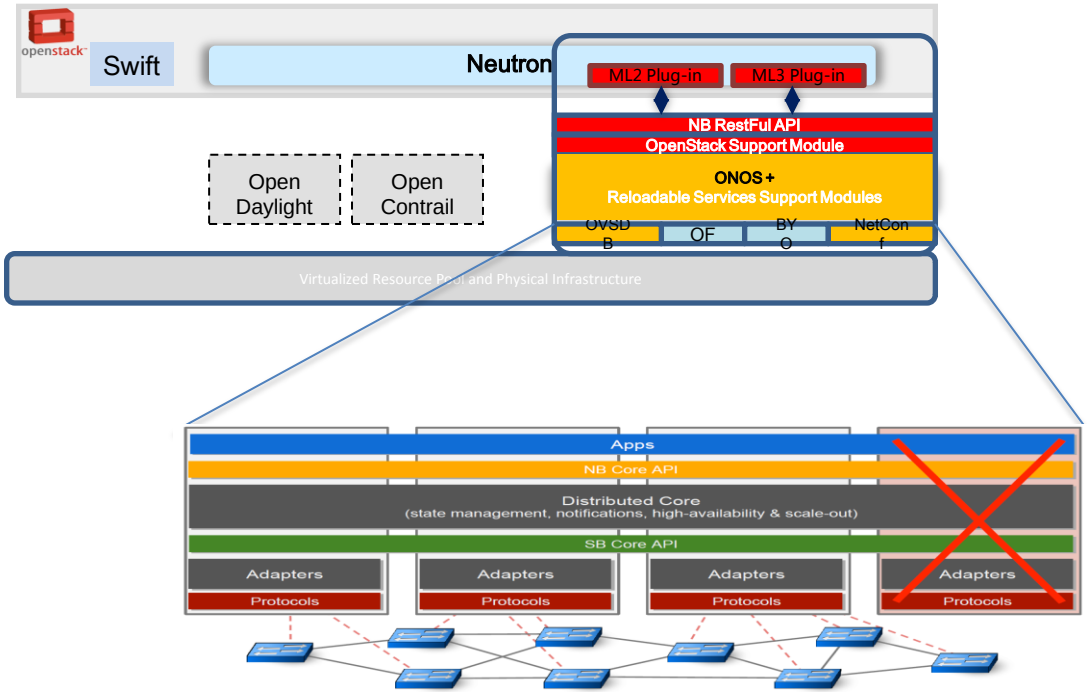

1. High Performance: 2M Flow/s (7 nodes Cluster)
2. **HA**
3. Faster Failover: (ms level)
4. **DC**: 10s thousands OVS and 2M OF table
5. **NFaaS** service for Next Gen. CO DevOps

ONOSFW as input track of OCTOPUS

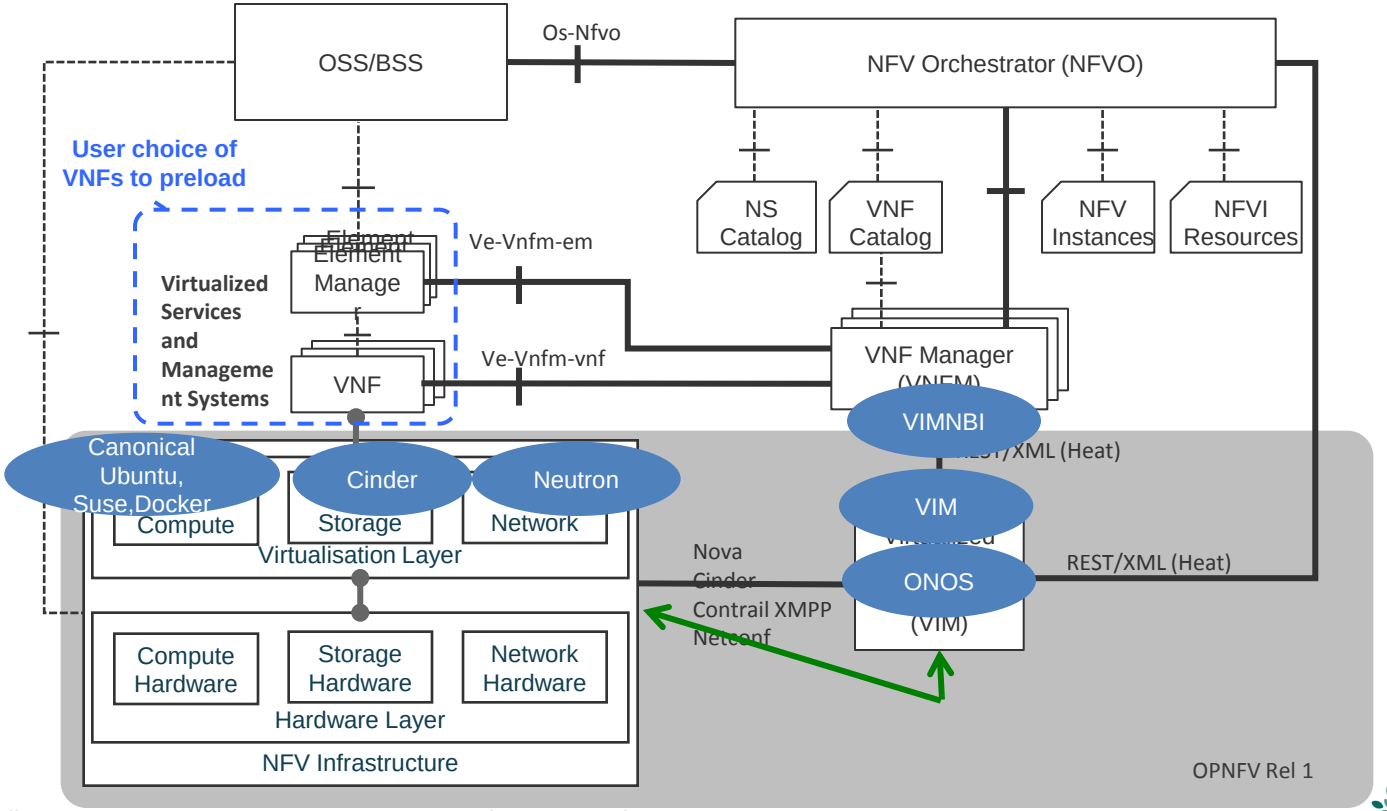

Latitude of NB APIs – Source ONF WG

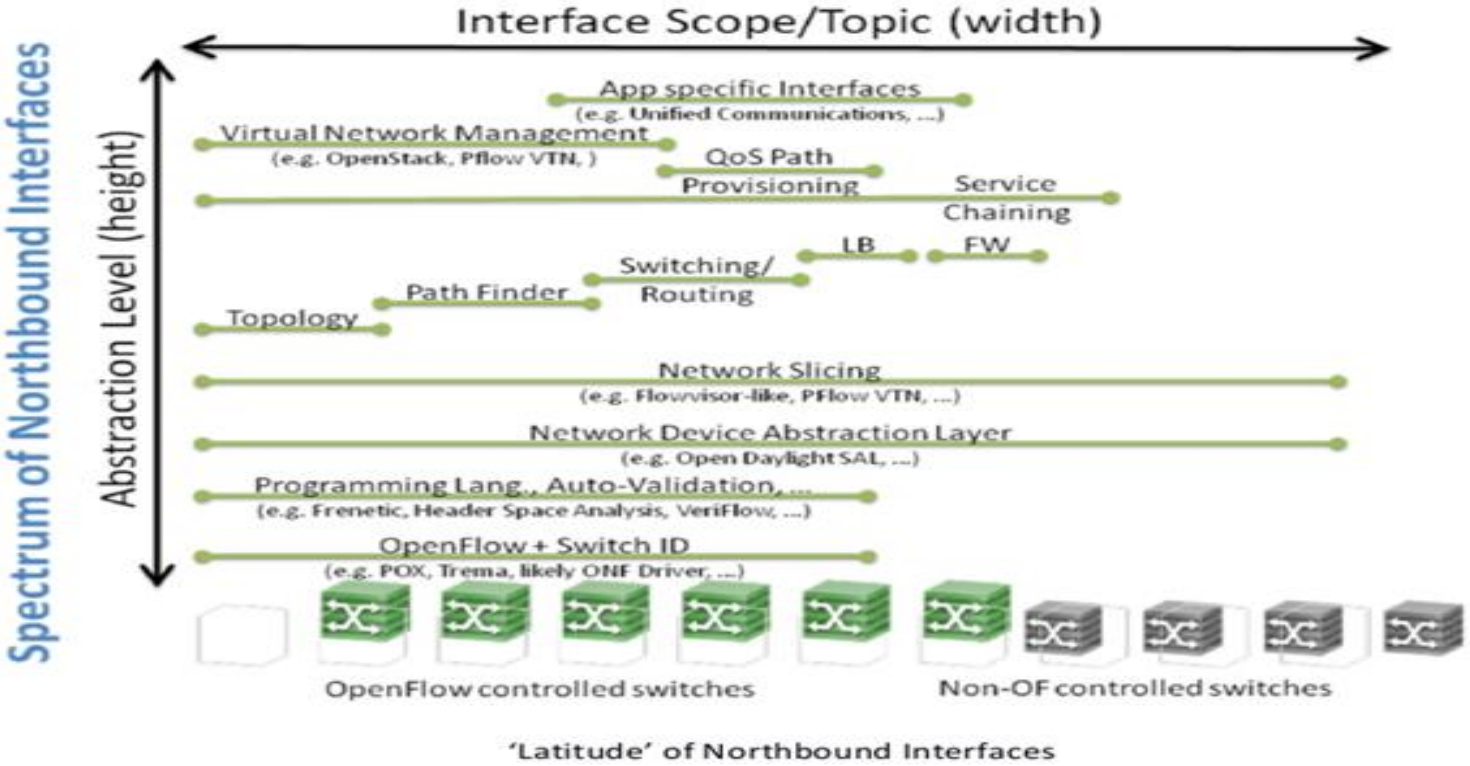

ONF working group NBI Standardization
- working in progress

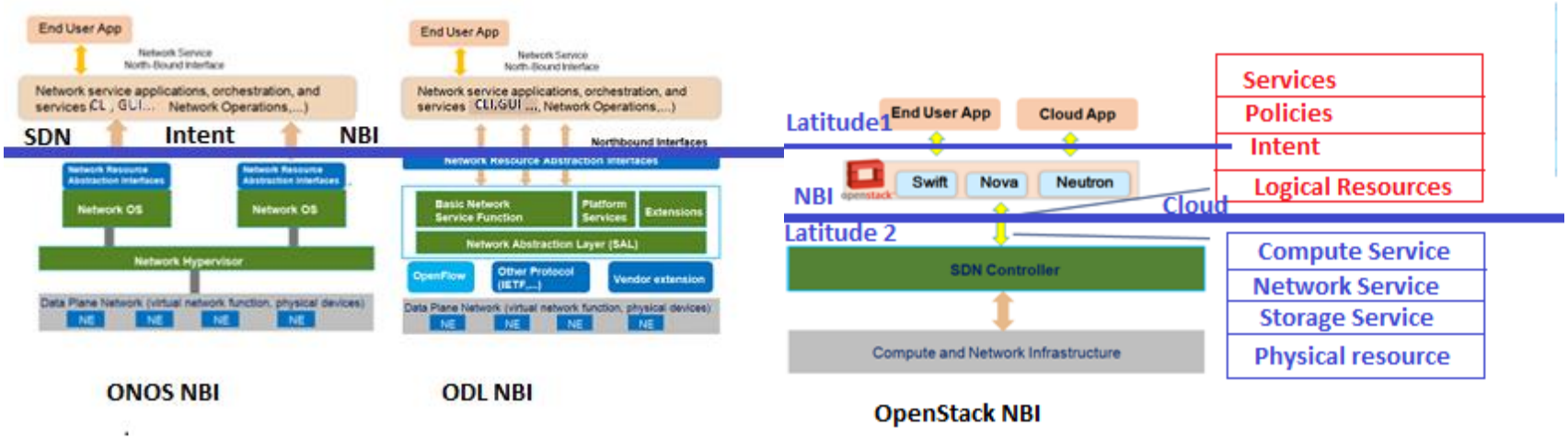

ONOSFW SDN NBI

OpenStack NBI

Source: ONF NB WG

OPNFV Upstream Project Scope

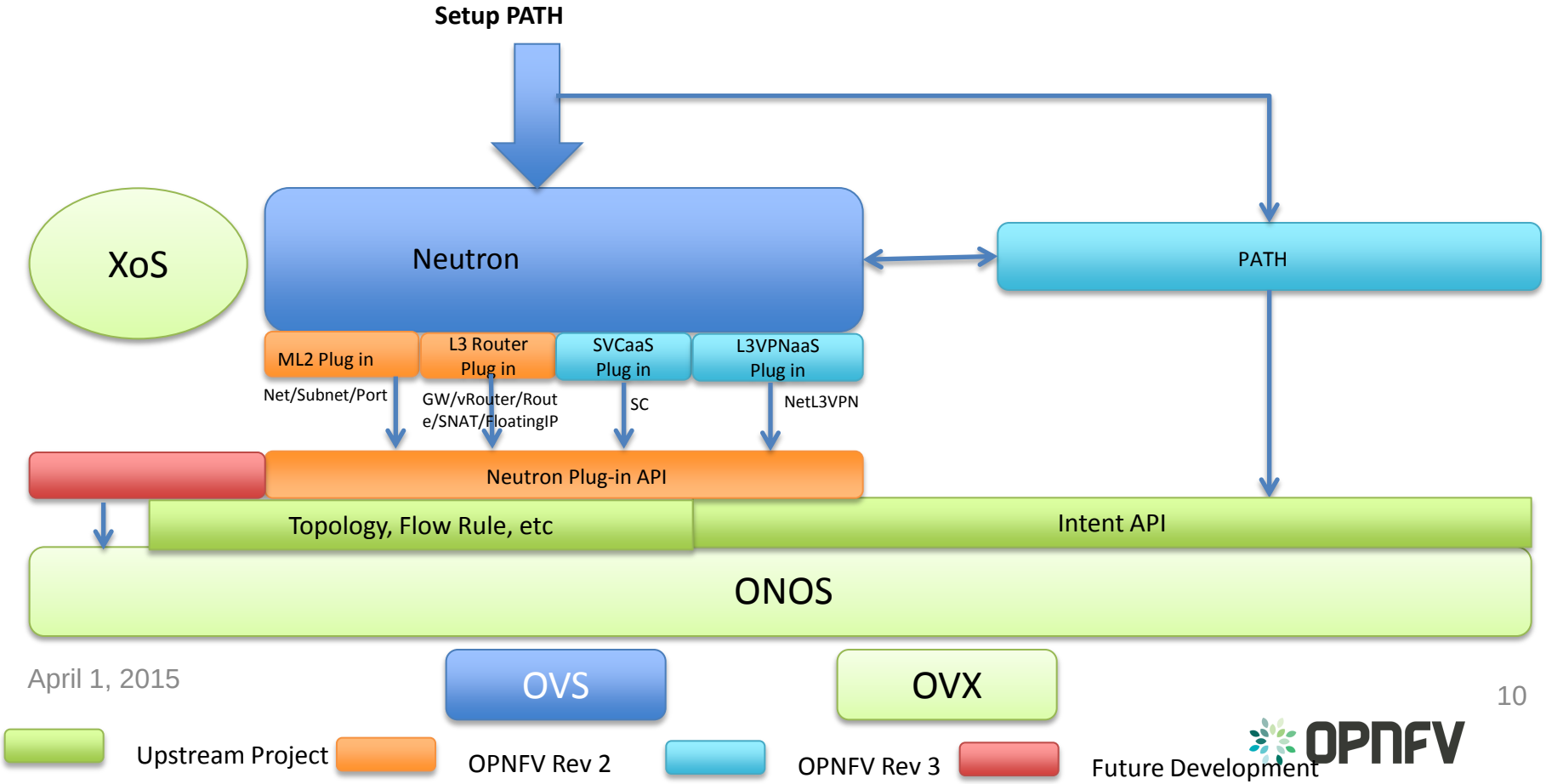

Features to be scoped (1/3)

Scenarios	Functionalities
Neutron L2/L3 Network service	Neutron ML2 and L3 Router APIs
	VxLAN tunnel Setup
Inter-VM communication within same subnet	MAC Table installation
	Install a policy for capturing ARP packet (Flow Rule)
	ARP Proxy
Inter-subnet , Inter VM communication for the same tenant (private-private subnet communication)	Router resource allocation and assign a Gateway for Tenant (1)
	Routing service
Inter-subnet , Inter VM communication for the same tenant (private-public communication)	Tenant SNAT/Floating IP service

Features to be scoped– ONOS ML2 Mechanism Driver (2/3)

- APIs to be supported

NB [Create, Read(Show/List…	Update] SB… ML2/3/Mech Driver
Intent – CR(S/L)UD	Network – CR(S/L)UD
Topology – CR(S/L)UD	Subnet – CR(S/L)UD
Path – CR(S/L)UD	Port – CR(S/L)UD
MapTopo2(SB/NB) – CR(S/L)UD	vRouter – CR(S/L)UD

- Support considerations for VxLAN, VLAN, and GRE
- Add RESTful Agent to communicate with ONOS through RESTful API

Features to be scoped– ONOS Router Driver (3/3)

- APIs supported
  - Port create/delete
  - SNAT enable/disable
  - Floating IP NAT rule
  - Routing processing
- RESTful agent, used to communicate with ONOS

Relationship between ONOSFW and OPNFV Projects

	OPNFV Project	ONOSFW	Uses	Attributes
1	IPv6 Enabled OPNFV	Use case 1 (CO),2MNO	IPv6 Topology	Prefix Delegation
2	Multi-Site OPNFV	Distributed ONOS Core	Parallelism	Distribute Clusters
3	Congress	Intent	Policy	API
4	Promise/vimnbi	Intent NBI	Policy	API
5	VNFFG	Path/Link	Graph	API
6	Doctor	Link/State	Notification	API
7	Elevator	Package	Updates	API
8	DP Acceleration	Flow	Cluster	Per Controller

ONOS ML2 Plug-in API (to be supported)

Neutron element	API	Action	Notes
Network	/v2.0/network	get	Lists network to which the specified tenant has access.
	/v2.0/network	post	Creates single or multiple network in a single request.
	/v2.0/network/{network_id}	get	Shows information for a specified network.
	/v2.0/network/{network_id}	put	Updates a specified network.
	/v2.0/network/{network_id}	delete	Deletes a specified network and its associated resources.
Subnet	/v2.0/subnets	get	Lists subnets to which the specified tenant has access.
	/v2.0/subnets	post	Creates single or multiple subnets on a specified network.
	/v2.0/subnets/{subnet_id}	get	Shows information for a specified subnet.
	/v2.0/subnets/{subnet_id}	put	Updates a specified subnet.
	/v2.0/subnets/{subnet_id}	delete	Deletes a specified subnet.
port	/v2.0/ports	get	Lists ports to which the tenant has access.
	/v2.0/ports	post	Creates single or multiple ports on a specified network.
	/v2.0/ports/{port_id}	get	Shows information for a specified port.
	/v2.0/ports/{port_id}	put	Updates a specified port.
	/v2.0/ports/{port_id}	delete	Deletes a specified port.

ONOS ML3 Appliance Plug-in API (to be supported)

Neutron element	API	Action	Notes
L3VPN	/v2.0/L3VPN	get	Lists L3VPN instances to which the specified tenant has access with acees if Addr, role(edge-if/center-if), username. Password, Phy.Node/if/proto…
	/v2.0/L3VPN	post	Creates single or multiple L3VPN in a single request.(hub &spoke or full-mesh)
	/v2.0/L3VPN/{l3vpn_id}	get	Shows information for a specified L3VPN.
	/v2.0/L3VPN/{l3vpn_id}	put	Updates a specified L3VPN. Attributes like VRF, RT,RD etc.
	/v2.0/L3VPN/{l3vpn_id}	delete	Deletes a specified L3vpn and its associated resources.
FW	/v2.0/vfw	get	Lists vfw to which the specified tenant has access with Policy & rules
	/v2.0/vfw	post	Creates single or multiple vfw on a specified network for tenant, policy & rules
	/v2.0/vfw/{fw_id}	get	Shows information for a specified vfw. By tenant, policy , rules
	/v2.0/vfw/{fw_id}	put	Updates a specified vfw. For updatable policy, rules etc.
	/v2.0/vfw/{fw_id}	delete	Deletes a specified vfw.
VR	/v2.0/vr	get	Lists vr to which the tenant has access.
	/v2.0/vr	post	Creates single or multiple snat(N-S)/dnat (E-W/N-S) vr on a specified network.
	/v2.0/vr/{vr_id}	get	Shows information for a specified snat (N-S)/dnat (E-W,N-S) vr.
	/v2.0/vr/{vr_id}	put	Updates a specified vr. For N-S/E-W snat/dnat
	/v2.0/vr/{vrt_id}	delete	Deletes a specified vr.

Upstream Collaboration for Development Integration

Project	Specs	Packages	Start	End
OPNFV	ONOSFW	Openstack+onos	Spec by May 23	November 10
Neutron	API extension	BP in Neutron	Spec by May 23	October 23
Horizon	GUI for Topology	BP in Horizon	Spec by May 23	October 23
Keystone	ID Management	BP in Keystone	Spec by May 23	October 23
Congress	Policy /Intent	BP in Congress	Spec by May 23	October 23
BGS/renamed project	Different Stacks	TBD	Spec by May 23	Maintenance/Ongoing
Octopus	Automation	TBD	Spec by May 23	Ongoing
Tools	TBD	TBD	Spec by May 23	Ongoing

Resources

- Committers
  - Zhao Kexue (Huawei, zhaokexue@huawei.com)
  - Patrick Liu (Huawei, patrick.liu@huawei.com)
  - John Strassner (Huawei, john.sc.Strassner@huawei.com)
  - Mike Young (Huawei, michael.y@huawei.com)
- Contributors
  - Alex Zhang (China Mobile US Lab. alexzhang@chinamobile.com
  - Brian O'Conner (ON.Lab, brian@onlabs.us)
  - Hongbo Tian (Huawei, tianhongbo@huawei.com)
  - Huangzhipeng (Huawei, huangzhipeng@huawei.com)
  - Prakash Ramchandran (Huawei, prakash.ramchandran@huawei.com)
  - Robert Tao (Huawei, roberttao@huawei.com)
  - Tom Tofigh (AT&T, mt3682@att.com)
  - William Snow (ON.Lab, bill@onlab.us)
  - Wei Su (Huawei, su.wei@huawei.com)
  - Yang Jian (CMRI, yangjian5077@139.com)

Timelines

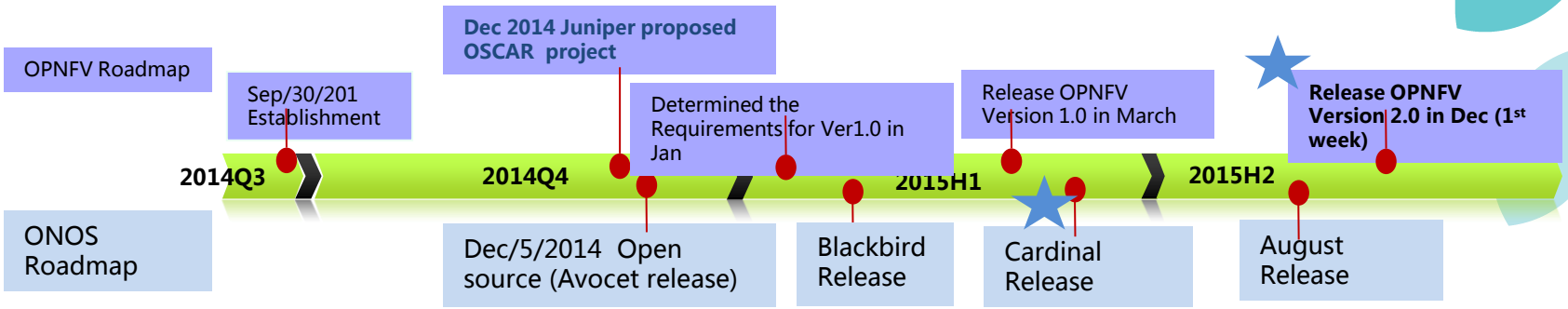

Target: Integrate ONOS inside OPNFV in Sep 2015

Thank You…

Please direct any questions or comments to
forum@onosfw.com or to http://forum.onosfw.com

Links to related Open Source Projects

- ONOS wiki
  - http://onosproject.org/
- OpenVirteX (OVX) – Programmable Virtual Network
  - http://ovx.onlab.us/
- XOS, cloud operating system
  - http://www.opencloud.us/

ONOS Distributed Architecture

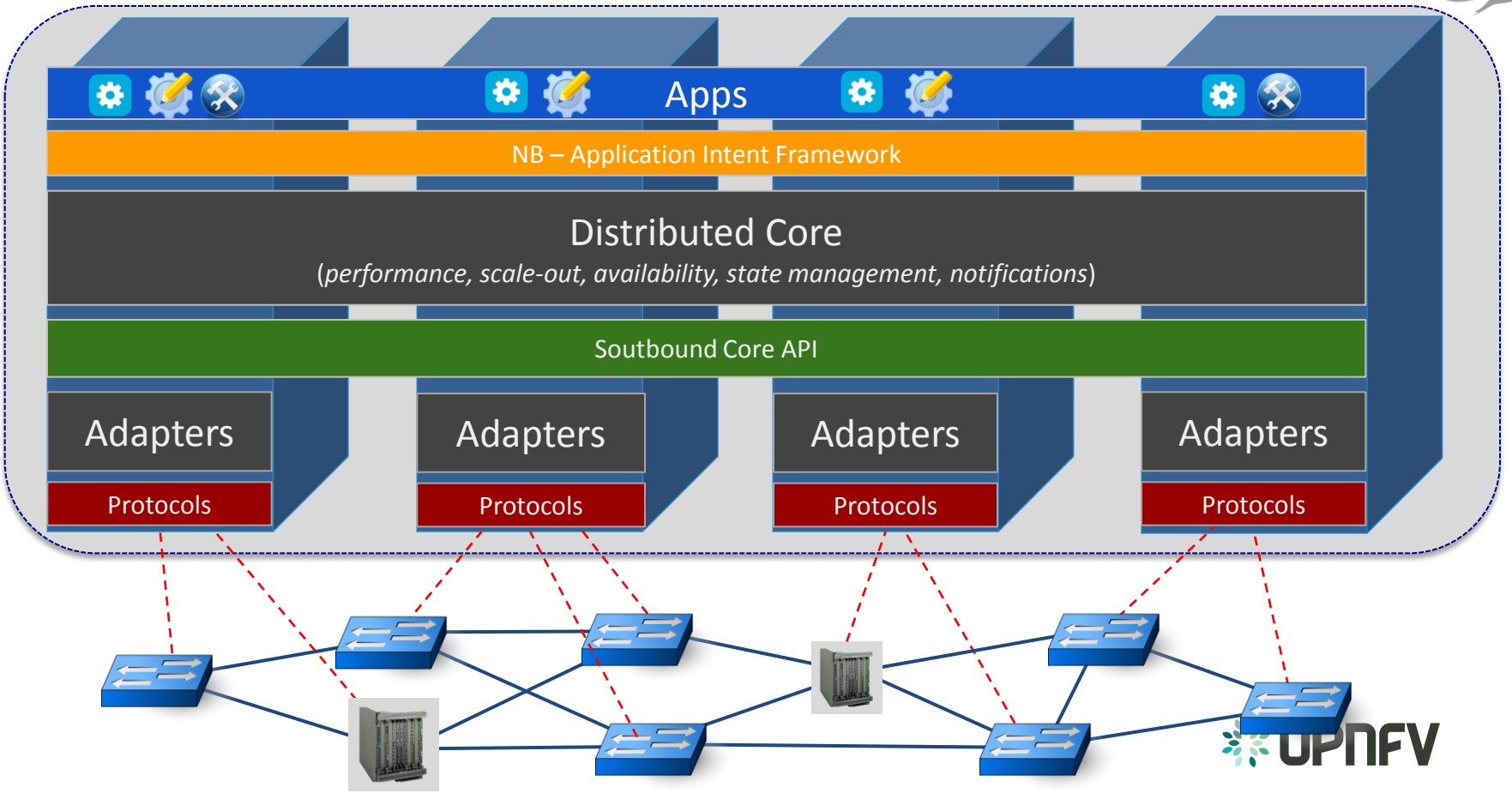

ONOS Application Intent Framework

I want to define “what” I need without worrying about “how”…

“Provision 10G path from Datacenter 1 to Datacenter2 optimized for cost”
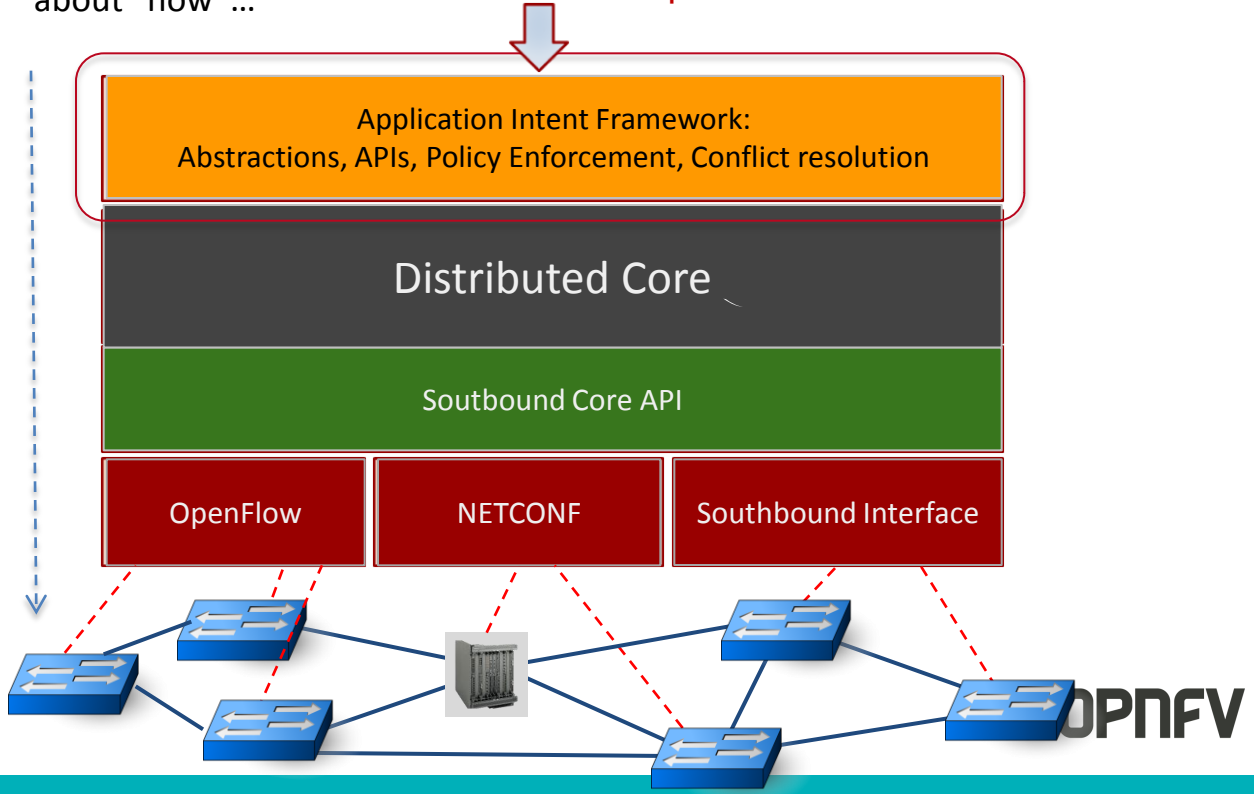
Intents translated and Compiled into specific instructions for network devices.